QUEO

Unit : mm

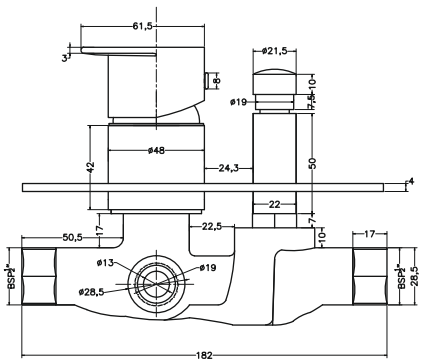

MAIN BODY ASSLY.

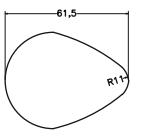

HANDLE

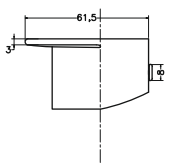

HANDLE

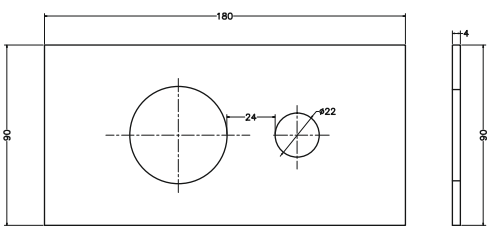

WALL FLANGE

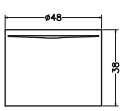

HANDLE

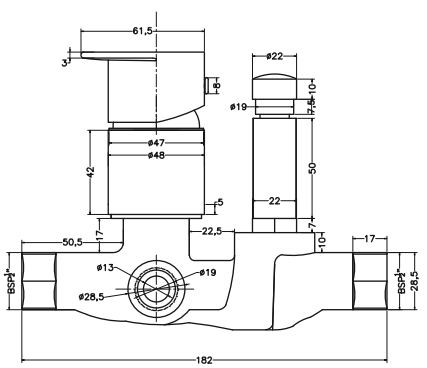

MAIN BODY ASSLY.

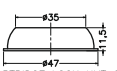

CARTRIDGE LOCK NUT CAP

ZINNIA		
Catalogue No.	:	**Q353123120**
Item Description	:	**Single lever bath & shower mixer for concealed installation**
Product Raw Material	:	**Brass**
ALL DIMENSIONS ARE IN MM		
Scale		**NTS**
Sheet Size		**A4**

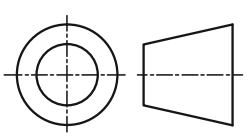

This Drawing remain the property of QUEO. It must not, even in part, be reproduced or may available to unauthorised person without express concerned of QUEO.